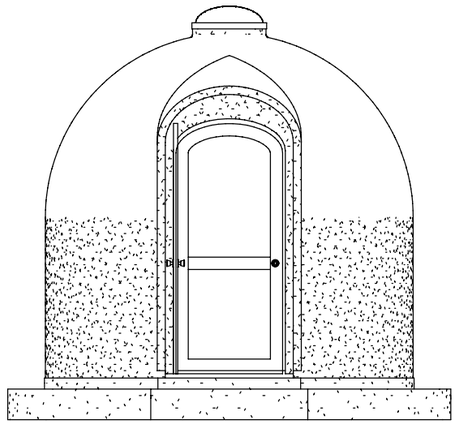

ELEVATION 1
SCALE 1:50

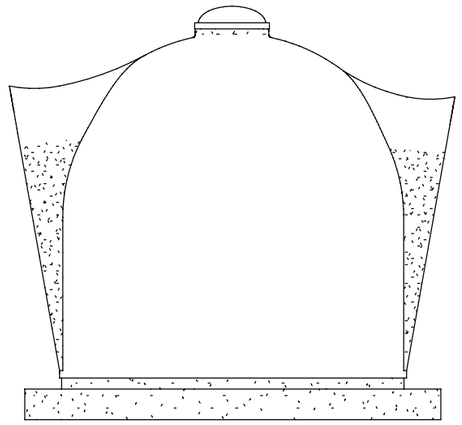

ELEVATION 2
SCALE 1:50

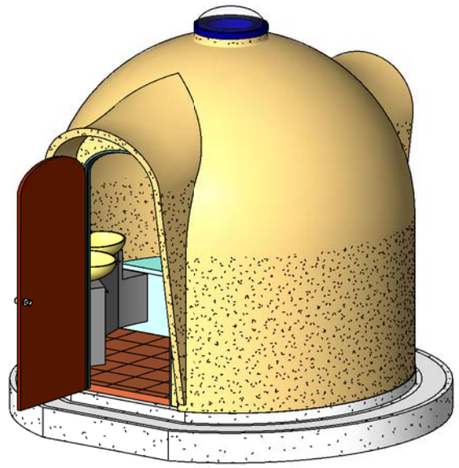

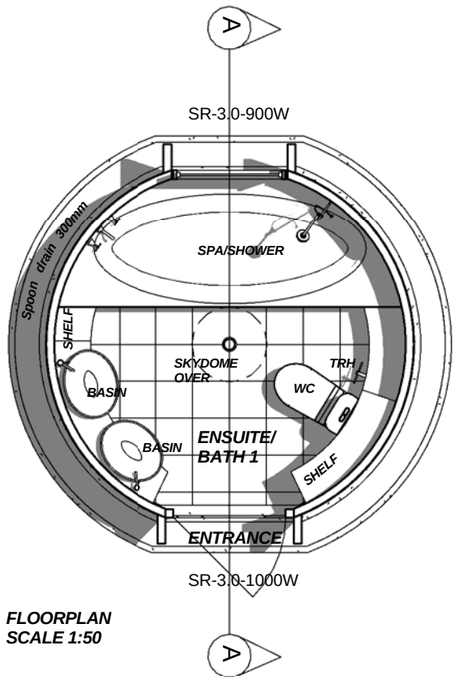

FLOORPLAN
SCALE 1:50

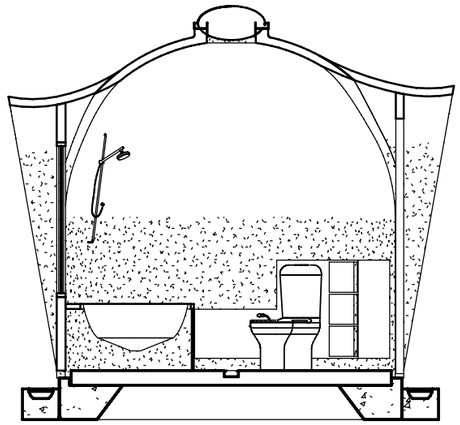

SECTION A-A
SCALE 1:50

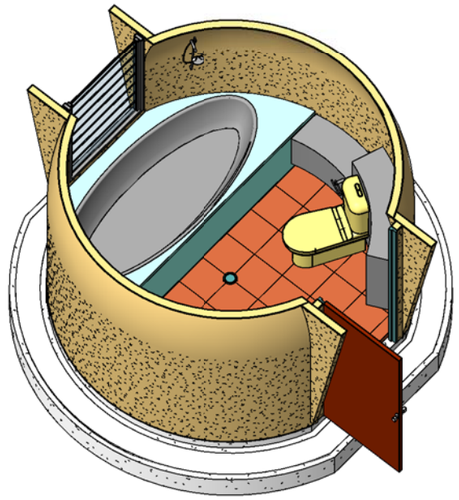

REV	DATE	BY	DESCRIPTION	GRID REF	CHECKED	APPROVED

DomeShells Technology Pty Ltd

ABN: 76 108 351 355
1 Wilfred Street, Billinudgel, NSW, 2483, Australia.
PO Box 820, Billinudgel, NSW, 2483, Australia
Tel: 02 6680 5500 Fax: 02 6680 5511
Email: info@domeshells.com.au Website:
www.domeshells.com.au

Copyright: All drawings remain the property of DomeShells Technoloy Pty Ltd, and are not to be reproduced, transmitted or used without the written permission of DomeShells Technology Pty Ltd, and are subject to recall at any time.

○ d o m e s h e l l s ○

References

Approve			
Checked			
Drawn			
Scale:			

Ensuite-Bath-1

Project Name

Sheet of

DRG. No.
SR-3m-Opt7

REV.